John Arcagua

Introduction

In the Arduino environment, a wide range of functionalities offer us the ability to interact with the physical world. In this project, we explore the analog capabilities of Arduino through the analogWrite() and analogRead() functions. These functions allow us to control the output voltage and read analog values respectively. By utilizing these functions, we can create dynamic and responsive projects that go beyond simple digital on-off interactions.

This project explores the analog functions in the Arduino environment. In Phase 1, an LED is smoothly faded using analogWrite(). Phase 2 utilizes analogRead() to gather data from an ultrasonic sensor or photoresistor, displayed in the serial monitor and graphically plotted. Phase 3 focuses on mapping sensor input to an output range for dynamic LED brightness control. Phase 4 integrates the analog functions into a modified Larson Scanner, enabling interactions like mapping distance/brightness to LED movement, adjusting the number of illuminated LEDs, and implementing fading effects. These phases demonstrate practical applications of analog functions, creating adaptable projects.

Implementation

Schematic diagram

Phase 1

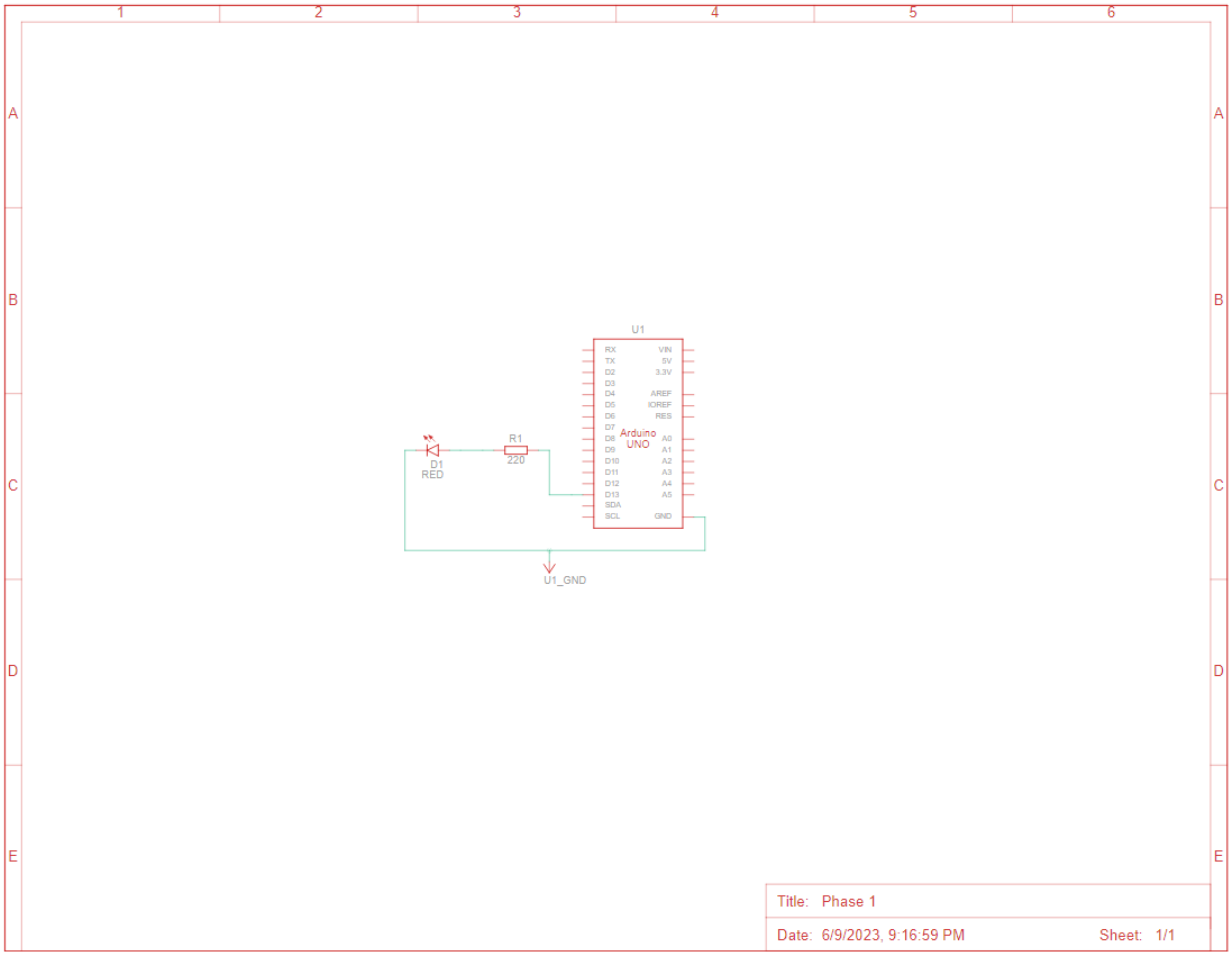

Phase 2 & 3

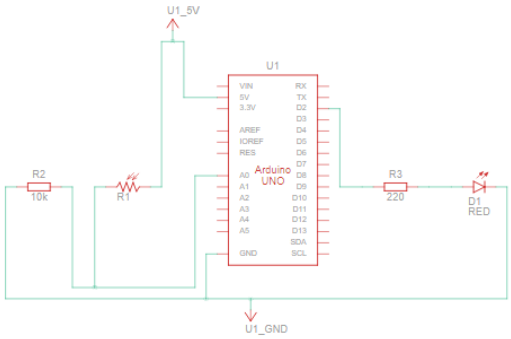

Title: Phase 2 and 3

Date: 6/9/2023, 9:18:45 PM

Sheet: 1/1

Phase 4

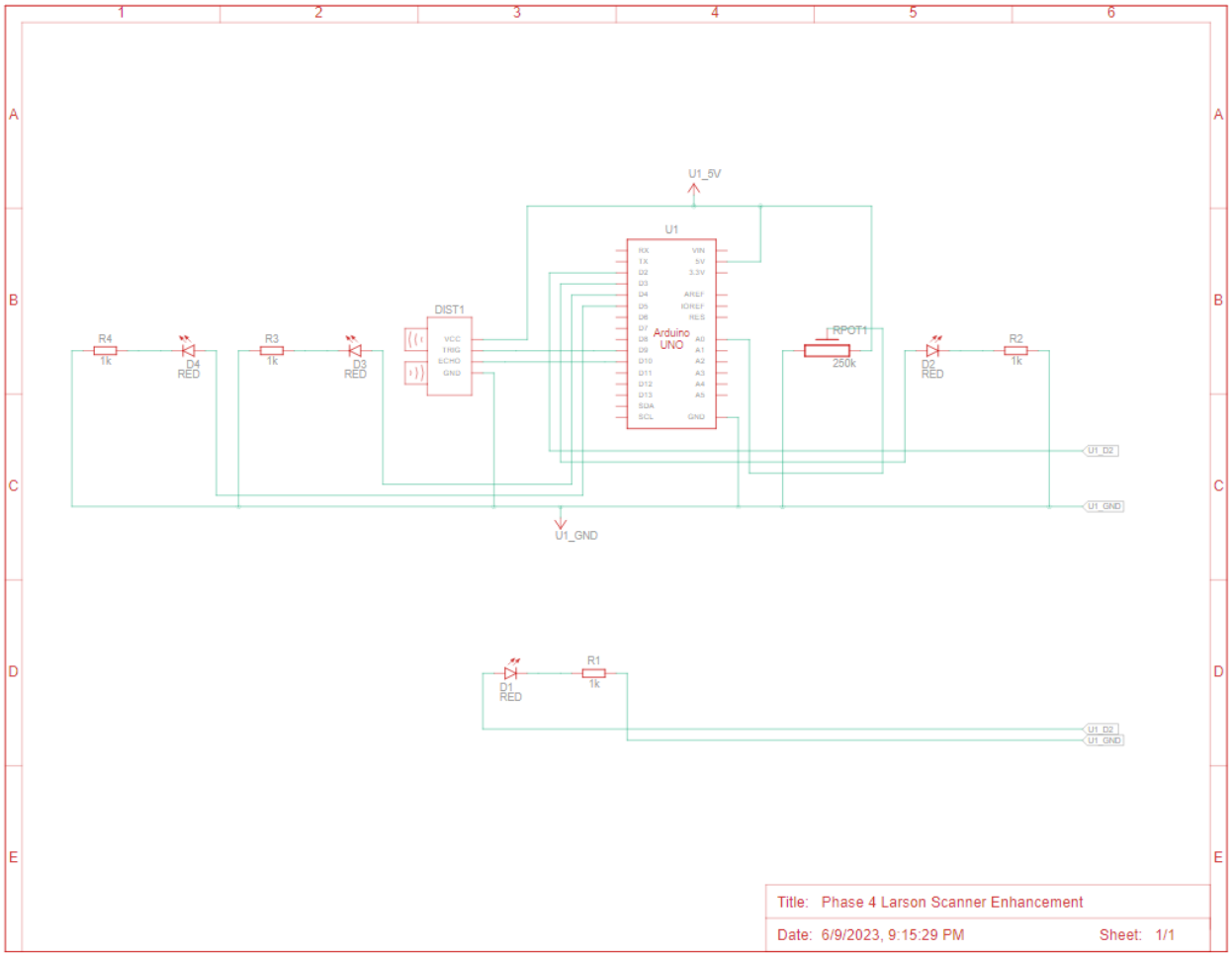

Picture of the Completed Circuit https://www.youtube.com/watch?v=jb5v9-HwxgM (Circuit Demonstration Video)

Phase 1

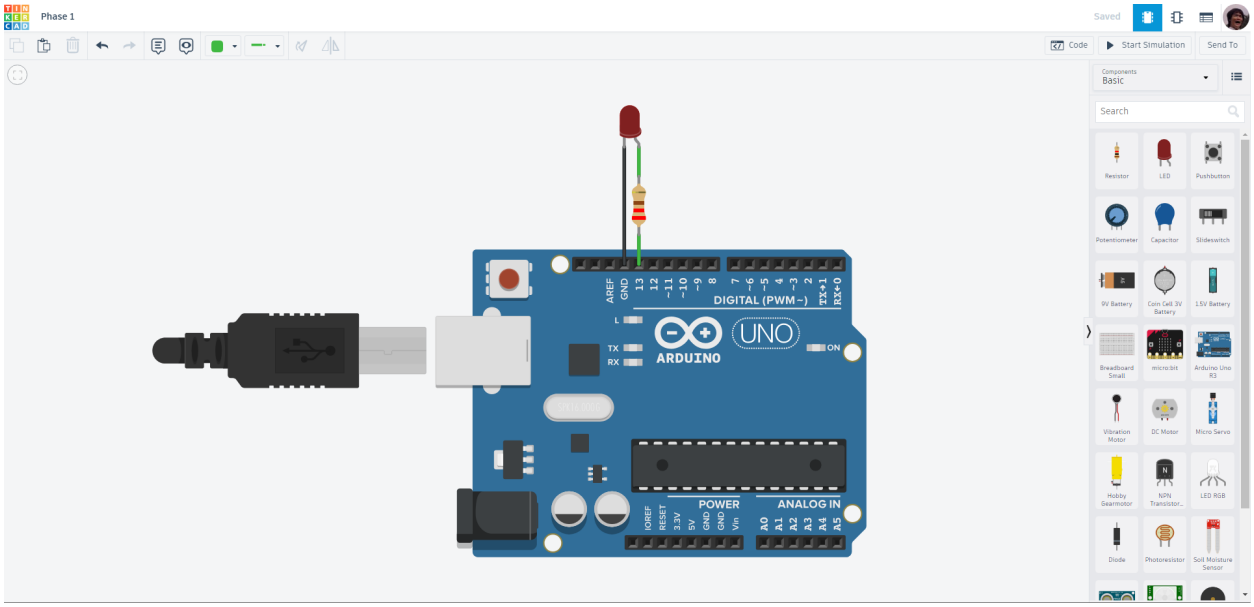

Phase 2 & 3

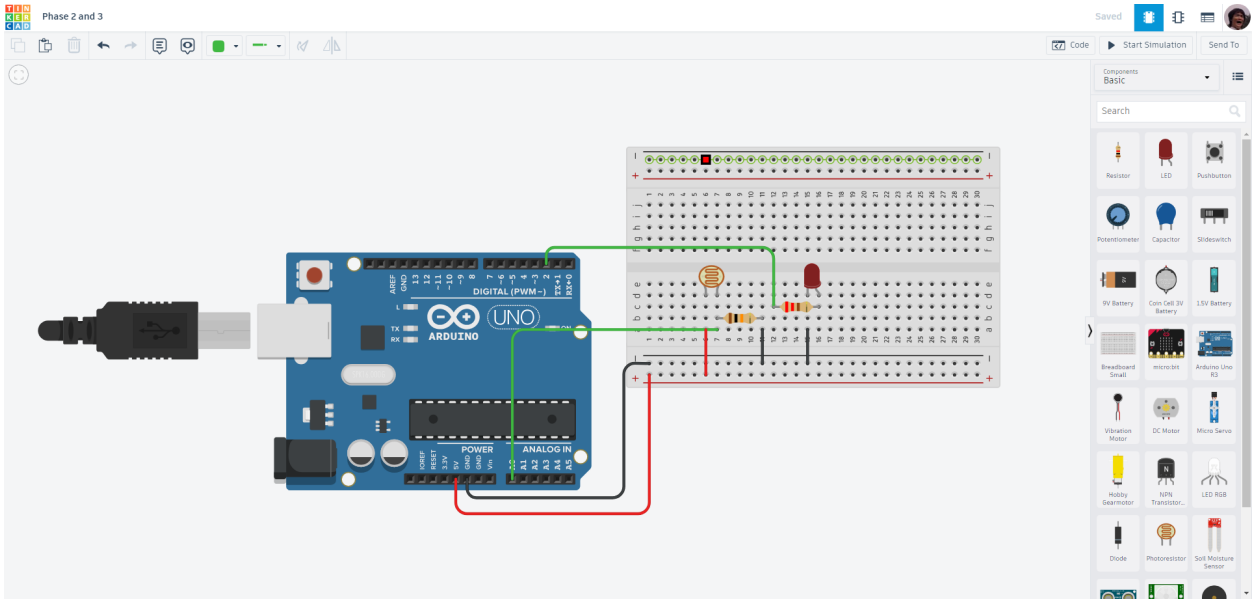

Phase 4

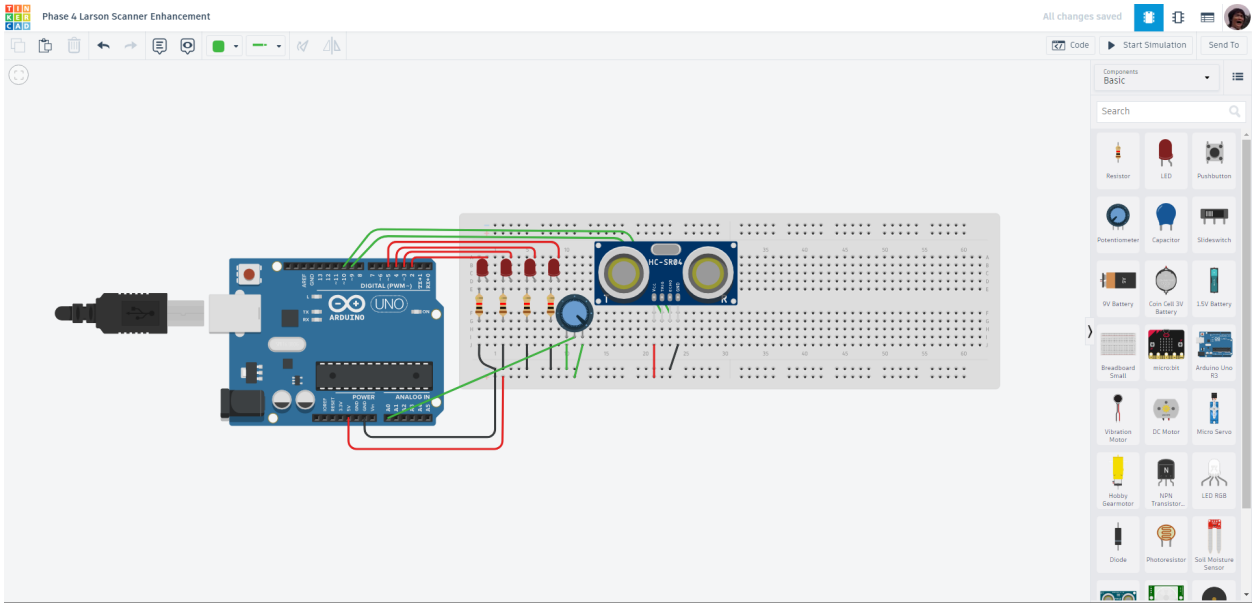

Source Code

All Source Codes are uploaded individually in .ino files

Explanation of Structure

This project had multiple phases, In Phase 1, analogWrite() is employed to smoothly fade an LED on and off, creating a visually appealing effect. The LED's brightness transitions from zero to full intensity and back in a continuous loop, which shows the capability of analogWrite() to control changes in output.

Phase 2 focuses on analogRead(), in which the data from an analog sensor, such as an ultrasonic sensor or photoresistor, is read and displayed in the serial monitor. I used the photoresistor for this particular phase. This phase provides insights into gathering and interpreting analog sensor data using the Arduino platform.

Phase 3 introduces mapping techniques using the map() function. By mapping the range of sensor input values to an appropriate output range, the program gains the ability to control LED brightness based on sensor readings dynamically. This allows for adaptive responses, such as adjusting LED brightness according to the proximity of an object or the intensity of light detected by a photoresistor.

Lastly, Phase 4 combines the analog functions to modify the Larson Scanner I previously made. Its purpose is to expand its capabilities through interactions with sensor inputs. This phase demonstrates the versatility and creative potential of integrating analog functions into interactive LED displays. The ultrasonic sensor controls the speed of the scanner and the photoresistor controls the brightness of the LEDs.

Calculations

This project involves several calculations to enhance the functionality of the analog sensors. In Phase 3, the map() function is utilized to transform the range of sensor input values to a desired output range. By scaling the sensor readings, this calculation enables precise control over LED brightness. In Phase 4, the timer variable responsible for controlling the LED movement speed in the Larson Scanner pattern is adjusted based on the distance reading. By using the map() function, the distance range is mapped to an appropriate timer value, adjusting the speed at which the LED bounces back and forth. Also, the analogWrite() function is applied to control the brightness of the LED. These calculations enhance the analog sensors resulting in a better experience.